火曜 朝 クラス2　2026年11月10日(火)朝

1

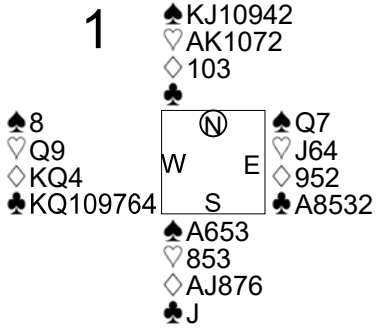

NS	EW	Contract	N-S	E-W	MP
5	9	5S N 6	480		4
11	6	5S N 5	450		2
8	10	4S N 5	450		2
4	7	4S N 5	450		2
2	3	4S N 4	420		0

2

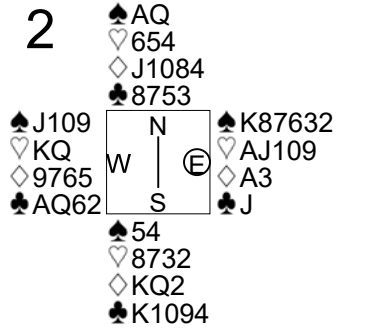

NS	EW	Contract	N-S	E-W	MP
8	10	4S E 4		420	3
4	7	4S E 4		420	3
2	3	4S E 4		420	3
11	6	4S E 5		450	0.5
5	9	4S E 5		450	0.5

3

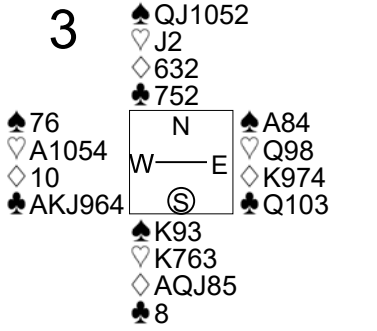

NS	EW	Contract	N-S	E-W	MP
11	7	5C W-1	100		4
9	1	3C W 4		130	2.5
5	8	3C W 4		130	2.5
6	10	2NT E 3		150	1
3	4	3NT E 3		600	0

4

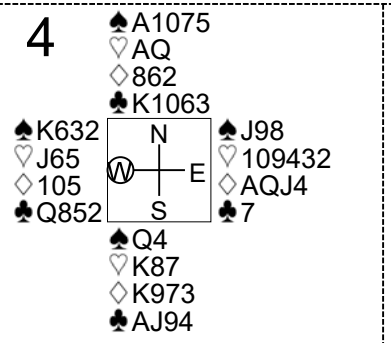

NS	EW	Contract	N-S	E-W	MP
11	7	3NT S 3	600		4
6	10	2H E-2	200		3
3	4	1NT S 3	150		2
9	1	3NT N-1		100	1
5	8	4NT S-2		200	0

5

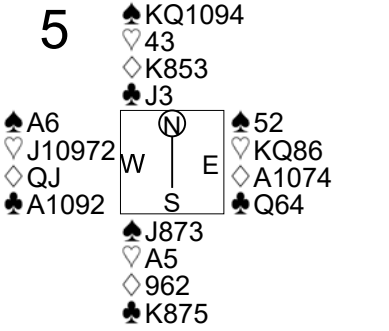

NS	EW	Contract	N-S	E-W	MP
4	5	3H W 4		170	4
6	9	4H W 4		420	2.5
10	2	4H W 4		420	2.5
7	1	4H W 5		450	1
11	8	4H W 6		480	0

6

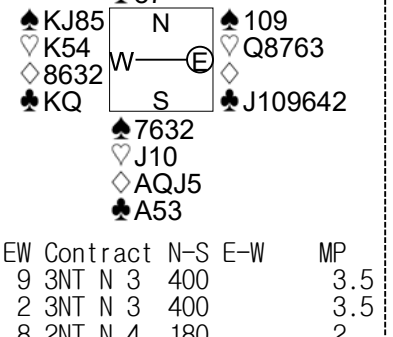

NS	EW	Contract	N-S	E-W	MP
6	9	3NT N 3	400		3.5
10	2	3NT N 3	400		3.5
11	8	2NT N 4	180		2
7	1	3D S 4	130		0.5
4	5	2D S 4	130		0.5

7

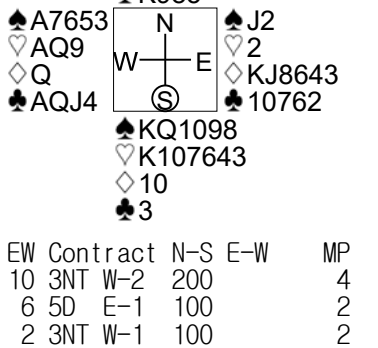

NS	EW	Contract	N-S	E-W	MP
7	10	3NT W-2	200		4
5	6	5D E-1	100		2
8	2	3NT W-1	100		2
1	3	1S W-1	100		2
11	9	1S W 1		80	0

8

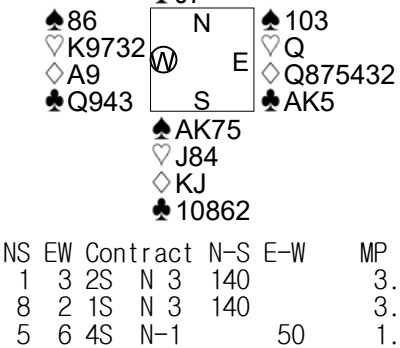

NS	EW	Contract	N-S	E-W	MP
1	3	2S N 3	140		3.5
8	2	1S N 3	140		3.5
5	6	4S N-1		50	1.5
7	10	3S N-1		50	1.5
11	9	2D E 3		110	0

9

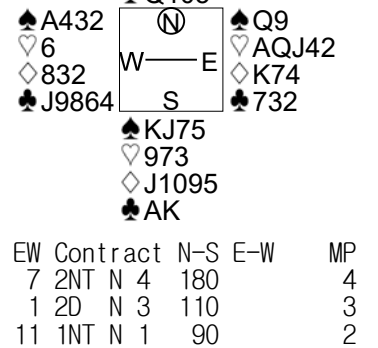

NS	EW	Contract	N-S	E-W	MP
6	7	2NT N 4	180		4
8	1	2D N 3	110		3
10	11	1NT N 1	90		2
2	4	2NT S-1		50	1
9	3	2NT W 3		150	0

10

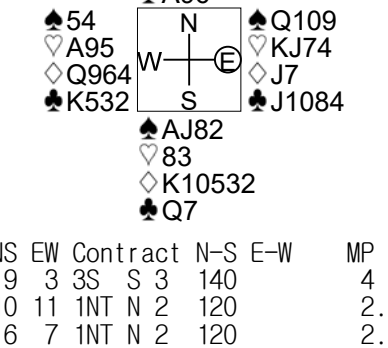

NS	EW	Contract	N-S	E-W	MP
9	3	3S S 3	140		4
10	11	1NT N 2	120		2.5
6	7	1NT N 2	120		2.5
2	4	1NT N 1	90		1
8	1	4S S-2		200	0

火曜 朝 クラス2　2026年11月10日(火)朝

11

N: ♠1084 ♡8542 ♢K95 ♣1032
W: ♠765 ♡76 ♢J732 ♣QJ85
E: ♠AJ92 ♡AJ10 ♢A864 ♣97
S: ♠KQ3 ♡KQ93 ♢Q10 ♣AK64

NS	EW	Contract	N-S	E-W	MP
10	4	2NT S 2	120		3.5
1	11	1NT S 2	120		3.5
7	8	1NT S 1	90		2
9	2	2NT S-2		100	0.5
3	5	1NT S-2		100	0.5

12

N: ♠1073 ♡8743 ♢KQJ8 ♣92
W: ♠QJ652 ♡A9 ♢A106 ♣K87
E: ♠K9 ♡105 ♢9532 ♣AJ653
S: ♠A84 ♡KQJ62 ♢74 ♣Q104

NS	EW	Contract	N-S	E-W	MP
10	4	3S W-1	50		4
1	11	2C W 2		90	3
9	2	3S E 3		140	2
3	5	1NT E 3		150	1
7	8	3H S-2		200	0

13

N: ♠AJ84 ♡97654 ♢ ♣AJ63
W: ♠K9753 ♡ ♢10983 ♣KQ85
E: ♠102 ♡AJ102 ♢AK42 ♣972
S: ♠Q6 ♡KQ83 ♢QJ765 ♣104

NS	EW	Contract	N-S	E-W	MP
1	5	4H N 4	620		4
2	11	1NT E-2	200		3
10	3	2H N 4	170		2
8	9	2H S 3	140		1
4	6	3NT E-1	100		0

14

N: ♠J873 ♡876 ♢Q109 ♣J84
W: ♠102 ♡J95 ♢543 ♣Q6532
E: ♠Q954 ♡Q1032 ♢J2 ♣K107
S: ♠AK6 ♡AK4 ♢AK876 ♣A9

NS	EW	Contract	N-S	E-W	MP
1	5	3NT S 6	490		4
4	6	3NT S 4	430		3
10	3	6NT N-1		50	1.5
8	9	3NT S-1		50	1.5
2	11	4S S-2		100	0

15

N: ♠A3 ♡KJ964 ♢J10 ♣J976
W: ♠Q642 ♡AQ2 ♢863 ♣A52
E: ♠95 ♡1085 ♢AQ95 ♣KQ103
S: ♠KJ1087 ♡73 ♢K742 ♣84

NS	EW	Contract	N-S	E-W	MP
5	7	3C W-2	100		3
9	10	3C W-2	100		3
1	4	2C W-2	100		3
2	6	2H W-1	50		1
3	11	2S S-2		200	0

16

N: ♠A8 ♡105 ♢KJ109 ♣AK1095
W: ♠ ♡K98763 ♢7643 ♣832
E: ♠K43 ♡AQJ4 ♢Q82 ♣Q64
S: ♠QJ1097652 ♡2 ♢A5 ♣J7

NS	EW	Contract	N-S	E-W	MP
5	7	4S S 7	510		4
1	4	4S S 5	450		2
2	6	4S N 5	450		2
9	10	4S N 5	450		2
3	11	3S S 5	200		0

17

N: ♠QJ64 ♡J754 ♢954 ♣J10
W: ♠87532 ♡ ♢J83 ♣KQ843
E: ♠9 ♡Q10962 ♢KQ102 ♣A62
S: ♠AK10 ♡AK83 ♢A76 ♣975

NS	EW	Contract	N-S	E-W	MP
2	5	1NT S 3	150		4
10	1	2NT S-1		50	3
6	8	2NT N-2		100	2
3	7	2S W 2		110	1
4	11	4S N-4		200	0

18

N: ♠52 ♡KJ8762 ♢Q64 ♣74
W: ♠Q106 ♡1054 ♢J75 ♣KQ52
E: ♠9843 ♡AQ ♢K832 ♣863
S: ♠AKJ7 ♡93 ♢A109 ♣AJ109

NS	EW	Contract	N-S	E-W	MP
2	5	4H N 4	620		4
10	1	1NT S 2	120		3
4	11	3NT S-1		100	2
6	8	4H S-2		200	0.5
3	7	3NT S-2		200	0.5

19

N: ♠62 ♡K843 ♢A965 ♣964
W: ♠AQ83 ♡1052 ♢10874 ♣J8
E: ♠K954 ♡AQ7 ♢KQ ♣KQ103
S: ♠J107 ♡J96 ♢J32 ♣A752

NS	EW	Contract	N-S	E-W	MP
7	9	4S W 4		620	2.5
11	5	4S W 4		620	2.5
3	6	4S W 4		620	2.5
1	2	4S W 4		620	2.5
4	8	4S W 5		650	0

20

N: ♠AKQJ ♡Q42 ♢K83 ♣1065
W: ♠109873 ♡J ♢AJ1075 ♣J8
E: ♠6 ♡K108765 ♢9 ♣K9432
S: ♠542 ♡A93 ♢Q642 ♣AQ7

NS	EW	Contract	N-S	E-W	MP
7	9	3NT S 3	600		2.5
11	5	3NT N 3	600		2.5
4	8	3NT N 3	600		2.5
1	2	3NT N 3	600		2.5
3	6	4H E-5	500		0

Tuesday, November 10, 2026

1
N/-

	♠ KJT942 ♥ AKT72 ♦ T3 ♣ -	
♠ 8 ♥ Q9 ♦ KQ4 ♣ KQT9764		♠ Q7 ♥ J64 ♦ 952 ♣ A8532
11 12 7 10	♠ A653 ♥ 853 ♦ AJ876 ♣ J	

	N	S
N	6	6
♠	11	12
♥	11	11
♦	11	11
♣	4	4

Opt res: EW 7CX;800

	E	W
N	4	4
♠	1	1
♥	2	2
♦	2	2
♣	9	9

2
E/NS

	♠ AQ ♥ 654 ♦ JT84 ♣ 8753	
♠ JT9 ♥ KQ ♦ 9765 ♣ AQ62		♠ K87632 ♥ AJT9 ♦ A3 ♣ J
7 12 13 8	♠ 54 ♥ 8732 ♦ KQ2 ♣ KT94	

	N	S
N	1	1
♠	1	1
♥	1	1
♦	4	4
♣	5	5

Opt res: EW 6S;-980

	E	W
N	9	9
♠	12	12
♥	9	9
♦	9	9
♣	8	8

3
S/EW

	♠ QJT52 ♥ J2 ♦ 632 ♣ 752	
♠ 76 ♥ AT54 ♦ T ♣ AKJ964		♠ A84 ♥ Q98 ♦ K974 ♣ QT3
4 12 11 13	♠ K93 ♥ K763 ♦ AQJ85 ♣ 8	

	N	S
N	3	3
♠	7	7
♥	3	3
♦	7	7
♣	3	3

Opt res: EW 3C;-130

	E	W
N	8	8
♠	5	5
♥	8	8
♦	5	5
♣	10	10

4
W/All

	♠ AT75 ♥ AQ ♦ 862 ♣ KT63	
♠ K632 ♥ J65 ♦ T5 ♣ Q852		♠ J98 ♥ T9432 ♦ AQJ4 ♣ 7
13 6 8 13	♠ Q4 ♥ K87 ♦ K973 ♣ AJ94	

	N	S
N	10	10
♠	9	9
♥	7	7
♦	9	9
♣	10	10

Opt res: NS 3N;630

	E	W
N	3	3
♠	4	4
♥	5	5
♦	4	4
♣	2	2

5
N/NS

	♠ KQT94 ♥ 43 ♦ K853 ♣ J3	
♠ A6 ♥ JT972 ♦ QJ ♣ AT92		♠ 52 ♥ KQ86 ♦ AT74 ♣ Q64
9 12 11 8	♠ J873 ♥ A5 ♦ 962 ♣ K875	

	N	S
N	4	4
♠	6	6
♥	2	2
♦	5	4
♣	3	3

Opt res: EW 4H;-420

	E	W
N	8	8
♠	7	7
♥	10	10
♦	8	8
♣	9	9

6
E/EW

	♠ AQ4 ♥ A92 ♦ KT974 ♣ 87	
♠ KJ85 ♥ K54 ♦ 8632 ♣ KQ		♠ T9 ♥ Q8763 ♦ - ♣ JT9642
13 12 3 12	♠ 7632 ♥ JT ♦ AQJ5 ♣ A53	

	N	S
N	10	10
♠	9	9
♥	5	5
♦	10	10
♣	5	5

Opt res: NS 3N;430

	E	W
N	3	3
♠	3	4
♥	7	7
♦	3	3
♣	7	7

7
S/All

	♠ 4 ♥ J85 ♦ A9752 ♣ K985	
♠ A7653 ♥ AQ9 ♦ Q ♣ AQJ4		♠ J2 ♥ 2 ♦ KJ8643 ♣ T762
8 19 5 8	♠ KQT98 ♥ KT7643 ♦ T ♣ 3	

	N	S
N	4	7
♠	6	6
♥	9	9
♦	3	3
♣	2	3

Opt res: EW 4D/W 4C;-130

	E	W
N	6	6
♠	6	6
♥	4	4
♦	10	10
♣	9	10

8
W/-

	♠ QJ942 ♥ AT65 ♦ T6 ♣ J7	
♠ 86 ♥ K9732 ♦ A9 ♣ Q943		♠ T3 ♥ Q ♦ Q875432 ♣ AK5
8 9 11 12	♠ AK75 ♥ J84 ♦ KJ ♣ T862	

	N	S
N	7	7
♠	9	9
♥	6	6
♦	4	4
♣	6	6

Opt res: EW 4DX;100

	E	W
N	6	6
♠	4	4
♥	6	6
♦	9	9
♣	7	7

9
N/EW

	♠ T86 ♥ KT85 ♦ AQ6 ♣ QT5	
♠ A432 ♥ 6 ♦ 832 ♣ J9864		♠ Q9 ♥ AQJ42 ♦ K74 ♣ 732
11 5 12 12	♠ KJ75 ♥ 973 ♦ JT95 ♣ AK	

	N	S
N	9	8
♠	8	7
♥	7	7
♦	8	7
♣	6	6

Opt res: N 3N;400

	E	W
N	4	4
♠	5	5
♥	6	6
♦	5	5
♣	6	6

10
E/All

	♠ K763 ♥ QT62 ♦ A8 ♣ A96	
♠ 54 ♥ A95 ♦ Q964 ♣ K532		♠ QT9 ♥ KJ74 ♦ J7 ♣ JT84
13 9 8 10	♠ AJ82 ♥ 83 ♦ KT532 ♣ Q7	

	N	S
N	7	7
♠	9	9
♥	6	7
♦	8	8
♣	5	5

Opt res: NS 1S;140

	E	W
N	6	6
♠	4	4
♥	6	6
♦	5	5
♣	7	7

11
S/-

	♠ T84 ♥ 8542 ♦ K95 ♣ T32	
♠ 765 ♥ 76 ♦ J732 ♣ QJ85		♠ AJ92 ♥ AJT ♦ A864 ♣ 97
3 4 14 19	♠ KQ3 ♥ KQ93 ♦ QT ♣ AK64	

	N	S
N	7	7
♠	7	7
♥	8	8
♦	6	6
♣	7	7

Opt res: NS 2H;110

	E	W
N	6	6
♠	6	6
♥	5	5
♦	7	7
♣	6	6

12
W/NS

	♠ T73 ♥ 8743 ♦ KQJ8 ♣ 92	
♠ QJ652 ♥ A9 ♦ AT6 ♣ K87		♠ K9 ♥ T5 ♦ 9532 ♣ AJ653
6 14 8 12	♠ A84 ♥ KQJ62 ♦ 74 ♣ QT4	

	N	S
N	5	5
♠	4	4
♥	7	7
♦	5	5
♣	3	3

Opt res: EW 1S;-140

	E	W
N	8	8
♠	9	9
♥	6	6
♦	8	8
♣	9	9

N/S/E/W | **HCP:** 8.9 12.1 10.1 9.0 | **Bal:** 12 13 12 10 | **> 6:** 0 1 1 1 | **= 1:** 1 5 7 5 | **= 0:** 2 0 1 3

Tuesday, November 10, 2026

13
N/All

	♠ AJ84 ♥ 97654 ♦ - ♣ AJ63	
♠ K9753 ♥ - ♦ T983 ♣ KQ85		♠ T2 ♥ AJT2 ♦ AK42 ♣ 972
10 8 12 10	♠ Q6 ♥ KQ83 ♦ QJ765 ♣ T4	

	N	S
N	8	8
♠	6	6
♥	9	9
♦	6	6
♣	7	7

Opt res:
NS 1H;140

	E	W
N	5	5
♠	6	6
♥	4	4
♦	7	7
♣	6	6

14
E/-

	♠ J873 ♥ 876 ♦ QT9 ♣ J84	
♠ T2 ♥ J95 ♦ 543 ♣ Q6532		♠ Q954 ♥ QT32 ♦ J2 ♣ KT7
4 3 8 25	♠ AK6 ♥ AK4 ♦ AK876 ♣ A9	

	N	S
N	10	10
♠	10	10
♥	9	9
♦	10	10
♣	8	8

Opt res:
NS 3N;430

	E	W
N	2	2
♠	3	2
♥	4	4
♦	3	3
♣	5	5

15
S/NS

	♠ A3 ♥ KJ964 ♦ JT ♣ J976	
♠ Q642 ♥ AQ2 ♦ 863 ♣ A52		♠ 95 ♥ T85 ♦ AQ95 ♣ KQT3
10 12 11 7	♠ KJT87 ♥ 73 ♦ K742 ♣ 84	

	N	S
N	5	5
♠	6	6
♥	6	6
♦	5	5
♣	5	5

Opt res:
W 1N;-120

	E	W
N	7	8
♠	5	6
♥	6	6
♦	7	7
♣	7	8

16
W/EW

	♠ A8 ♥ T5 ♦ KJT9 ♣ AKT95	
♠ - ♥ K98763 ♦ 7643 ♣ 832		♠ K43 ♥ AQJ4 ♦ Q82 ♣ Q64
15 3 14 8	♠ QJT97652 ♥ 2 ♦ A5 ♣ J7	

	N	S
N	7	7
♠	11	11
♥	5	5
♦	7	7
♣	9	9

Opt res:
NS 4S;450

	E	W
N	6	6
♠	1	1
♥	7	7
♦	5	6
♣	4	4

17
N/-

	♠ QJ64 ♥ J754 ♦ 954 ♣ JT	
♠ 87532 ♥ - ♦ J83 ♣ KQ843		♠ 9 ♥ QT962 ♦ KQT2 ♣ A62
5 6 11 18	♠ AKT ♥ AK83 ♦ A76 ♣ 975	

	N	S
N	7	7
♠	6	6
♥	6	6
♦	4	4
♣	4	4

Opt res:
EW 3C;-110

	E	W
N	6	6
♠	7	7
♥	7	7
♦	8	8
♣	9	9

18
E/NS

	♠ 52 ♥ KJ8762 ♦ Q64 ♣ 74	
♠ QT6 ♥ T54 ♦ J75 ♣ KQ52		♠ 9843 ♥ AQ ♦ K832 ♣ 863
6 8 9 17	♠ AKJ7 ♥ 93 ♦ AT9 ♣ AJT9	

	N	S
N	7	7
♠	7	7
♥	10	10
♦	7	7
♣	7	7

Opt res:
NS 4H;620

	E	W
N	6	6
♠	6	6
♥	3	3
♦	6	6
♣	6	6

19
S/EW

	♠ 62 ♥ K843 ♦ A965 ♣ 964	
♠ AQ83 ♥ T52 ♦ T874 ♣ J8		♠ K954 ♥ AQ7 ♦ KQ ♣ KQT3
7 7 19 7	♠ JT7 ♥ J96 ♦ J32 ♣ A752	

	N	S
N	3	3
♠	2	2
♥	4	4
♦	4	4
♣	3	3

Opt res:
EW 4S;-650

	E	W
N	9	9
♠	11	11
♥	8	8
♦	9	9
♣	9	9

20
W/All

	♠ AKQJ ♥ Q42 ♦ K83 ♣ T65	
♠ T9873 ♥ J ♦ AJT75 ♣ J8		♠ 6 ♥ KT8765 ♦ 9 ♣ K9432
15 7 6 12	♠ 542 ♥ A93 ♦ Q642 ♣ AQ7	

	N	S
N	9	9
♠	9	9
♥	6	6
♦	9	9
♣	7	6

Opt res:
NS 3N;600

	E	W
N	4	4
♠	4	4
♥	7	7
♦	4	4
♣	6	6