関西秋季スイスペア OPEN SWISS PAIRS Session 1 Flight C 2026年11月3日(火)

1

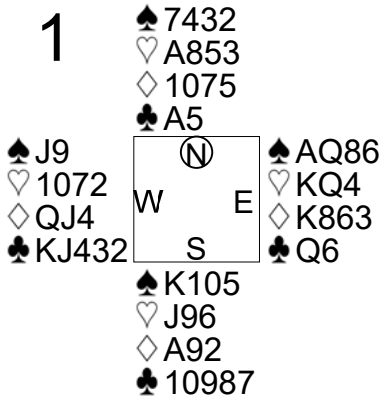

NS	EW	Contract	N-S	E-W	IMP
1	5	3NT E-2	100		5
8	4	3NT E-1	50		3
3	7	3NT E-1	50		3
11	14	3NT E-1	50		3
9	12	3NT E-1	50		3
13	10	3NT E 3		400	-8.5
6	2	3NT E 3		400	-8.5

2

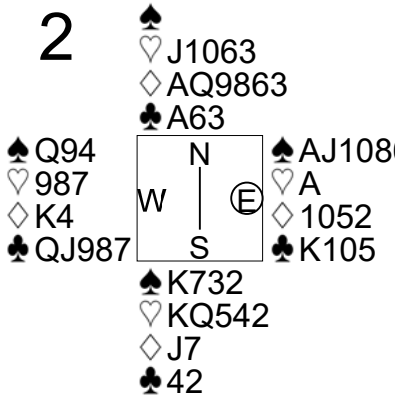

NS	EW	Contract	N-S	E-W	IMP
6	2	4H S 4	620		11.33
8	4	4S E-2	100		0.17
11	14	3S E-2	100		0.17
3	7	4S E-1	50		-1.67
9	12	4S E-1	50		-1.67
1	5	3S E-1	50		-1.67
13	10	3S E 3		140	-6.67

3

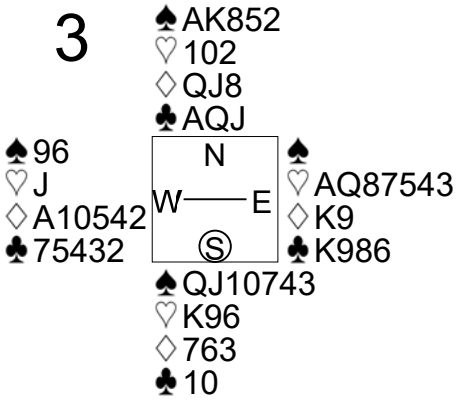

NS	EW	Contract	N-S	E-W	IMP
11	14	5Cx W-1	200		7.5
9	12	4S S-1		50	1.5
1	5	4S S-1		50	1.5
13	10	4S N-1		50	1.5
8	4	5S N-2		100	-0.33
6	2	5S N-2		100	-0.33
3	7	4H E 4		620	-11.33

4

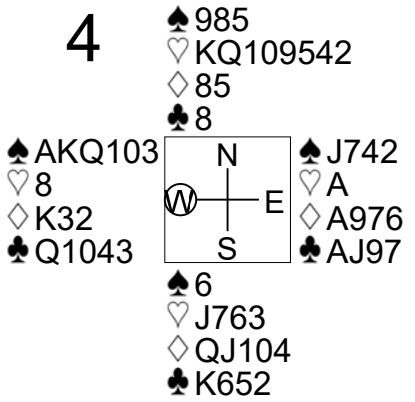

NS	EW	Contract	N-S	E-W	IMP
6	2	6S W-1	100		7.17
1	5	6S W-1	100		7.17
8	4	6S W-1	100		7.17
13	10	6S W-1	100		7.17
9	12	4S W 5		650	-6.5
3	7	4S W 5		650	-6.5
11	14	6S W 6		1430	-15.67

5

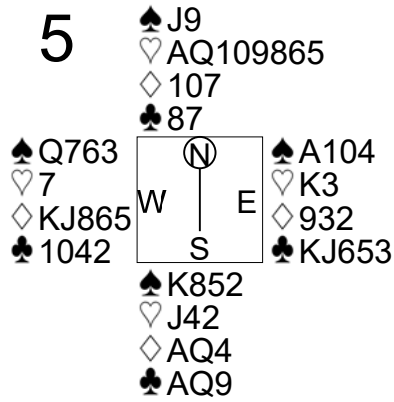

NS	EW	Contract	N-S	E-W	IMP
6	2	4H S 5	650		5
1	5	4H S 4	620		4
8	4	4H S 4	620		4
3	7	4H N 4	620		4
11	14	4Sx W-3	500		1.17
13	10	2H S 4	170		-6.83
9	12	4H N-1		100	-11.33

6

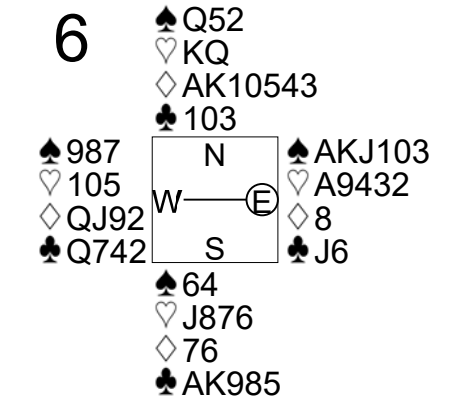

NS	EW	Contract	N-S	E-W	IMP
13	10	4S E-2	200		3.17
9	12	3S E-2	200		3.17
6	2	3S E-1	100		-0.17
1	5	3S E-1	100		-0.17
3	7	3S E-1	100		-0.17
11	14	3S E-1	100		-0.17
8	4	2S E 2		110	-5.67

7

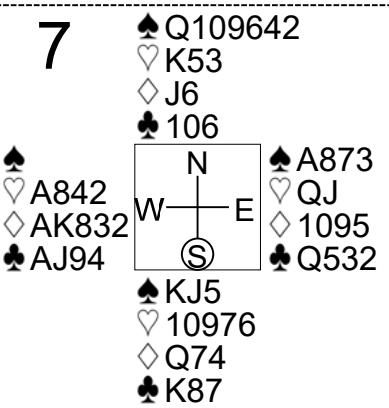

NS	EW	Contract	N-S	E-W	IMP
3	7	3NT E-2	200		10.5
13	10	3S N-1		100	4.83
6	2	3D W 4		130	4
9	12	2NT E 4		180	2.5
1	5	5D W 5		600	-7
11	14	3NT E 3		600	-7
8	4	3NT E 4		630	-7.83

8

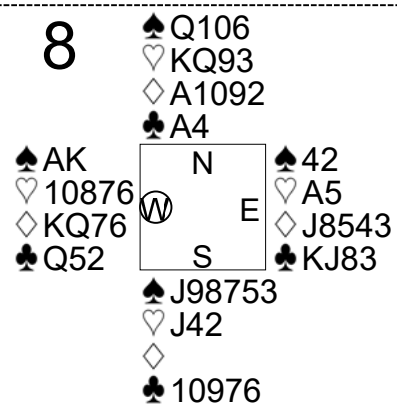

NS	EW	Contract	N-S	E-W	IMP
11	14	5Dx W-2	300		5.83
1	5	3S S 3	140		1.67
9	12	3S N 3	140		1.67
8	4	2S S 3	140		1.67
3	7	4D W-1	50		-1.33
6	2	3S N-1		50	-4
13	10	3D W 3		110	-5.5

9

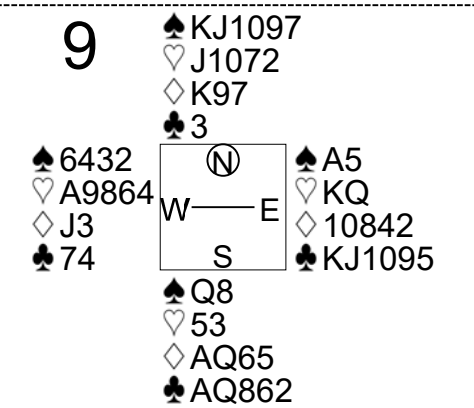

NS	EW	Contract	N-S	E-W	IMP
1	5	2NT S 6	240		4
3	7	1NT E-2	200		2.83
11	14	2S N 4	170		1.83
9	12	1S N 4	170		1.83
6	2	2C E-1	100		-0.33
13	10	2S N-1		50	-4.67
8	4	1NT E 1		90	-5.5

10

N: ♠1063 ♡ ♢AQ10974 ♣K653
W: ♠95 ♡KQ104 ♢J62 ♣AQ87
E: ♠KJ4 ♡AJ8765 ♢K53 ♣2
S: ♠AQ872 ♡932 ♢8 ♣J1094

NS	EW	Contract	N-S	E-W	IMP
7	13	5D N 5	600		12
5	4	4H E-2	200		4.33
3	2	5H E-1	100		1.67
11	12	4H E-1	100		1.67
8	14	4H E-1	100		1.67
6	1	4H E 4		620	-10.67
9	10	4H E 4		620	-10.67

11

N: ♠1065 ♡AJ ♢KJ ♣AQ8543
W: ♠Q3 ♡K10865 ♢Q9762 ♣K
E: ♠J842 ♡Q97 ♢4 ♣J10762
S: ♠AK97 ♡432 ♢A10853 ♣9

NS	EW	Contract	N-S	E-W	IMP
11	12	3NT N 3	400		10.5
3	2	3NT N-1		50	-0.67
6	1	3NT N-1		50	-0.67
9	10	3NT N-1		50	-0.67
7	13	3NT S-2		100	-2.83
8	14	3NT S-2		100	-2.83
5	4	3NT N-2		100	-2.83

12

N: ♠J5 ♡A74 ♢1097542 ♣Q2
W: ♠74 ♡KQJ106 ♢AKJ ♣A63
E: ♠A1083 ♡98 ♢Q8 ♣J9754
S: ♠KQ962 ♡532 ♢63 ♣K108

NS	EW	Contract	N-S	E-W	IMP
6	1	3NT W 3		400	0.17
3	2	3NT W 3		400	0.17
7	13	3NT W 3		400	0.17
9	10	3NT W 3		400	0.17
11	12	3NT W 3		400	0.17
8	14	3NT W 3		400	0.17
5	4	3NT W 4		430	-1

13

N: ♠KQ765 ♡10765 ♢102 ♣95
W: ♠103 ♡AJ943 ♢763 ♣J87
E: ♠4 ♡Q8 ♢AKQ94 ♣AKQ62
S: ♠AJ982 ♡K2 ♢J85 ♣1043

NS	EW	Contract	N-S	E-W	IMP
11	12	4D E 6		170	10.17
7	13	5S S-4		400	5.33
8	14	5D W 6		620	-0.5
6	1	5D E 6		620	-0.5
9	10	5D E 6		620	-0.5
5	4	5C E 6		620	-0.5
3	2	6D E 6		1370	-13.5

14

N: ♠9862 ♡6 ♢KQJ72 ♣K85
W: ♠A5 ♡KQ1052 ♢A106 ♣J62
E: ♠107 ♡J974 ♢9843 ♣Q103
S: ♠KQJ43 ♡A83 ♢5 ♣A974

NS	EW	Contract	N-S	E-W	IMP
5	4	4S S 6	480		1
8	14	4S S 5	450		-0.17
6	1	4S S 5	450		-0.17
3	2	4S S 5	450		-0.17
7	13	4S S 5	450		-0.17
9	10	4S S 5	450		-0.17
11	12	4S S 5	450		-0.17

15

N: ♠A6 ♡A107 ♢AQ1074 ♣Q54
W: ♠42 ♡KJ4 ♢K6 ♣K109863
E: ♠J1085 ♡Q832 ♢J2 ♣A72
S: ♠KQ973 ♡965 ♢9853 ♣J

NS	EW	Contract	N-S	E-W	IMP
5	4	2S N 5	200		1.5
3	2	3D N 6	170		0.33
6	1	2S N 4	170		0.33
7	13	2S N 4	170		0.33
9	10	2S N 4	170		0.33
11	12	2S N 3	140		-0.83
8	14	3C W-2	100		-2

16

N: ♠AKQ1085 ♡Q107 ♢43 ♣64
W: ♠6 ♡653 ♢K97 ♣AKQJ92
E: ♠972 ♡4 ♢10862 ♣108753
S: ♠J43 ♡AKJ982 ♢AQJ5 ♣

NS	EW	Contract	N-S	E-W	IMP
7	13	6S N 7	1010		11
3	2	5S N 7	510		-1.83
9	10	5H S 7	510		-1.83
11	12	4S N 7	510		-1.83
5	4	4S N 7	510		-1.83
8	14	4S N 7	510		-1.83
6	1	4S N 7	510		-1.83

17

N: ♠J94 ♡K1032 ♢53 ♣KJ64
W: ♠Q10873 ♡QJ84 ♢J984 ♣
E: ♠A ♡A965 ♢KQ10 ♣A10832
S: ♠K652 ♡7 ♢A762 ♣Q975

NS	EW	Contract	N-S	E-W	IMP
7	13	3NT E-3	150		4.83
8	14	4H E-1	50		1.83
3	2	4H E-1	50		1.83
6	1	4H E-1	50		1.83
11	12	2S E-1	50		1.83
5	4	2S E 2		110	-2.5
9	10	4H E 4		420	-9.67

18

N: ♠A965 ♡A54 ♢963 ♣J102
W: ♠KJ83 ♡KQ1072 ♢A ♣743
E: ♠Q1072 ♡J8 ♢KQJ74 ♣86
S: ♠4 ♡963 ♢10852 ♣AKQ95

NS	EW	Contract	N-S	E-W	IMP
8	14	4S E-2	100		3.67
6	1	4S E-2	100		3.67
5	4	4S E-1	50		1.83
3	2	4S E-1	50		1.83
9	10	3S E 3		140	-3.67
11	12	3S E 3		140	-3.67
7	13	2S E 3		140	-3.67

関西秋季スイスペア OPEN SWISS PAIRS Session 1 Flight C 2026年11月3日(火)

19

N: ♠82 ♡Q843 ♢J8 ♣97543
W: ♠AK65 ♡J96 ♢A42 ♣K102
E: ♠J10943 ♡10 ♢K1095 ♣QJ6
S: ♠Q7 ♡AK752 ♢Q763 ♣A8

NS	EW	Contract	N-S	E-W	IMP
3	10	2H S 2	110		8.5
1	8	4H S-2		100	4.67
13	6	4H S-2		100	4.67
7	14	3H S-2		100	4.67
11	4	4S E 4		620	-7.5
9	2	4S E 4		620	-7.5
5	12	4S E 4		620	-7.5

20

N: ♠AK93 ♡93 ♢AQ98 ♣A102
W: ♠J7 ♡KJ65 ♢J7652 ♣98
E: ♠Q64 ♡A108742 ♢1043 ♣3
S: ♠10852 ♡Q ♢K ♣KQJ7654

NS	EW	Contract	N-S	E-W	IMP
5	12	6NT N 7	1470		13
1	8	4S N 6	680		-1.33
11	4	4S N 5	650		-2.33
3	10	4S N 5	650		-2.33
7	14	4S N 5	650		-2.33
9	2	4S N 5	650		-2.33
13	6	4S N 5	650		-2.33

21

N: ♠753 ♡AKQ4 ♢KJ93 ♣Q10
W: ♠AQJ42 ♡95 ♢82 ♣AJ97
E: ♠1086 ♡J86 ♢Q1065 ♣653
S: ♠K9 ♡10732 ♢A74 ♣K842

NS	EW	Contract	N-S	E-W	IMP
5	12	4H N 4	620		10.5
3	10	4H N 4	620		10.5
9	2	4H N-1		100	-2.5
13	6	4H N-1		100	-2.5
11	4	4H N-2		200	-5.33
1	8	4H N-2		200	-5.33
7	14	4H N-2		200	-5.33

22

N: ♠1095 ♡J65 ♢KQ4 ♣AK72
W: ♠A32 ♡AK3 ♢8632 ♣Q108
E: ♠KQJ8 ♡109742 ♢A ♣J43
S: ♠764 ♡Q8 ♢J10975 ♣965

NS	EW	Contract	N-S	E-W	IMP
3	10	3H E 4		170	6.67
13	6	3H E 4		170	6.67
1	8	2H E 4		170	6.67
9	2	4H E 4		620	-5
11	4	4H E 4		620	-5
7	14	4H E 4		620	-5
5	12	3NT W 4		630	-5

23

N: ♠K982 ♡107 ♢8765 ♣942
W: ♠AQ ♡AJ854 ♢AQ3 ♣J107
E: ♠765 ♡K963 ♢94 ♣AKQ3
S: ♠J1043 ♡Q2 ♢KJ102 ♣865

NS	EW	Contract	N-S	E-W	IMP
13	6	4H W 6		680	11
7	14	4H W 7		710	10.33
5	12	6H W 6		1430	-3.67
1	8	6H W 6		1430	-3.67
9	2	6H W 7		1460	-4.67
11	4	6H W 7		1460	-4.67
3	10	6H W 7		1460	-4.67

24

N: ♠K952 ♡J10 ♢AJ103 ♣AJ3
W: ♠J87 ♡A96 ♢K62 ♣Q972
E: ♠AQ6 ♡7542 ♢Q875 ♣85
S: ♠1043 ♡KQ83 ♢94 ♣K1064

NS	EW	Contract	N-S	E-W	IMP
9	2	1NT S 3	150		0.5
11	4	1NT S 3	150		0.5
1	8	1NT S 3	150		0.5
3	10	1NT S 3	150		0.5
13	6	1NT S 2	120		-0.67
5	12	1NT S 2	120		-0.67
7	14	1NT S 2	120		-0.67

25

N: ♠A54 ♡Q7 ♢A762 ♣J1064
W: ♠K976 ♡1063 ♢Q98 ♣Q82
E: ♠J103 ♡AK942 ♢J54 ♣A5
S: ♠Q82 ♡J85 ♢K103 ♣K973

NS	EW	Contract	N-S	E-W	IMP
3	10	2H E 2		110	2.5
7	14	2H E 2		110	2.5
9	2	2H E 3		140	1.5
5	12	2H E 3		140	1.5
11	4	2H E 3		140	1.5
1	8	3C S-3		150	1.5
13	6	2Hx E 2		670	-11

26

N: ♠KJ92 ♡K7 ♢Q106 ♣A763
W: ♠43 ♡QJ8 ♢9542 ♣Q1094
E: ♠A8765 ♡1053 ♢J83 ♣52
S: ♠Q10 ♡A9642 ♢AK7 ♣KJ8

NS	EW	Contract	N-S	E-W	IMP
3	10	3NT S 5	660		0.33
7	14	3NT S 5	660		0.33
9	2	3NT S 5	660		0.33
5	12	3NT S 5	660		0.33
11	4	3NT S 5	660		0.33
1	8	3NT S 5	660		0.33
13	6	3NT S 3	600		-2

27

N: ♠AK2 ♡AJ7543 ♢97 ♣64
W: ♠874 ♡Q1092 ♢A104 ♣J102
E: ♠QJ1093 ♡K8 ♢852 ♣AQ7
S: ♠65 ♡6 ♢KQJ63 ♣K9853

NS	EW	Contract	N-S	E-W	IMP
3	10	3S E-3	150		3.17
7	14	3H N 3	140		3.17
5	12	3H N 3	140		3.17
11	4	2S E-1	50		0.17
13	6	4H N-1		50	-2.67
1	8	3H N-1		50	-2.67
9	2	4H N-2		100	-4.33

関西秋季スイスペア OPEN SWISS PAIRS Session 2 Flight C 2026年11月3日(火)

1

N: ♠Q8754 ♡10 ♢AQ53 ♣842
W: ♠A9 ♡Q654 ♢762 ♣A1065
E: ♠KJ103 ♡A2 ♢K10 ♣KQJ73
S: ♠62 ♡KJ9873 ♢J984 ♣9

NS	EW	Contract	N-S	E-W	IMP
2	1	3NT W 3		400	1.17
5	3	3NT E 3		400	1.17
8	11	3NT W 4		430	0
12	13	3NT E 4		430	0
9	14	3NT E 4		430	0
7	4	3NT E 5		460	-1.17
10	6	3NT E 5		460	-1.17

2

N: ♠K93 ♡Q10 ♢QJ82 ♣AKJ6
W: ♠J542 ♡AK ♢AK943 ♣73
E: ♠Q7 ♡J542 ♢75 ♣109842
S: ♠A1086 ♡98763 ♢106 ♣Q5

NS	EW	Contract	N-S	E-W	IMP
10	6	1NT W-4	200		4.17
12	13	1NT W-2	100		1.33
2	1	1NT W-2	100		1.33
7	4	1NT W-1	50		-0.67
5	3	1NT W-1	50		-0.67
9	14	1NT W-1	50		-0.67
8	11	2H N-1		100	-4.83

3

N: ♠1074 ♡QJ42 ♢KJ85 ♣65
W: ♠J832 ♡A875 ♢62 ♣A104
E: ♠AQ9 ♡963 ♢A1097 ♣KJ8
S: ♠K65 ♡K10 ♢Q43 ♣Q9732

NS	EW	Contract	N-S	E-W	IMP
12	13	2NT E-1	100		5.83
8	11	1NT E 1		90	0.17
5	3	1NT E 2		120	-1
10	6	1NT E 2		120	-1
9	14	1NT E 2		120	-1
2	1	1NT E 2		120	-1
7	4	1NT E 3		150	-2

4

N: ♠2 ♡J865 ♢KQ7 ♣K10743
W: ♠Q83 ♡K942 ♢1062 ♣852
E: ♠KJ654 ♡AQ7 ♢53 ♣AJ9
S: ♠A1097 ♡103 ♢AJ984 ♣Q6

NS	EW	Contract	N-S	E-W	IMP
5	3	2S E-1	100		1.67
2	1	1NT E-1	100		1.67
8	11	1NT E-1	100		1.67
12	13	1NT E-1	100		1.67
9	14	1NT E-1	100		1.67
7	4	1NT E 1		90	-4
10	6	2S E 2		110	-4.33

5

N: ♠J974 ♡KQJ2 ♢3 ♣K1093
W: ♠653 ♡A9643 ♢J1064 ♣7
E: ♠AK8 ♡105 ♢Q852 ♣J865
S: ♠Q102 ♡87 ♢AK97 ♣AQ42

NS	EW	Contract	N-S	E-W	IMP
5	3	3NT S 4	630		6.5
10	6	3NT S 4	630		6.5
7	4	3NT S 3	600		5.83
12	13	3NT S 3	600		5.83
9	14	3NT S-1		100	-7.5
8	11	3NT S-1		100	-7.5
2	1	3NT S-2		200	-9.67

6

N: ♠A9 ♡94 ♢Q105 ♣A107642
W: ♠10543 ♡K652 ♢KJ93 ♣3
E: ♠K76 ♡A103 ♢A8742 ♣95
S: ♠QJ82 ♡QJ87 ♢6 ♣KQJ8

NS	EW	Contract	N-S	E-W	IMP
2	1	3NT S 4	430		8.83
12	13	4D E-2	200		3.33
5	3	4C N 4	130		1.67
8	11	3C S 3	110		0.5
9	14	4C S-1		50	-3.33
7	4	3NT N-2		100	-4.83
10	6	3NT N-3		150	-6.17

7

N: ♠KQJ632 ♡Q109 ♢A10 ♣65
W: ♠A975 ♡J82 ♢QJ72 ♣A4
E: ♠8 ♡AK763 ♢K643 ♣K108
S: ♠104 ♡54 ♢985 ♣QJ9732

NS	EW	Contract	N-S	E-W	IMP
5	3	4H E 4		620	0.83
9	14	3NT W 4		630	0.83
10	6	4H E 5		650	-0.33
12	13	4H E 5		650	-0.33
2	1	4H E 5		650	-0.33
8	11	4H E 5		650	-0.33
7	4	4H E 5		650	-0.33

8

N: ♠AK1065 ♡Q87 ♢K ♣9754
W: ♠94 ♡AK1092 ♢864 ♣KJ6
E: ♠J8 ♡J654 ♢J1075 ♣Q83
S: ♠Q732 ♡3 ♢AQ932 ♣A102

NS	EW	Contract	N-S	E-W	IMP
12	13	5S N 6	480		1.83
10	6	4S N 6	480		1.83
9	14	4S N 6	480		1.83
2	1	4S N 6	480		1.83
8	11	4S N 6	480		1.83
5	3	4S N 6	480		1.83
7	4	6S N-1		50	-11

9

N: ♠4 ♡AQJ7 ♢AJ8643 ♣63
W: ♠K6 ♡K1082 ♢10 ♣AQ10874
E: ♠AJ108532 ♡953 ♢7 ♣95
S: ♠Q97 ♡64 ♢KQ952 ♣KJ2

NS	EW	Contract	N-S	E-W	IMP
10	6	5D N 5	400		4.17
9	14	3NT S 3	400		4.17
2	1	3NT S 3	400		4.17
8	11	3NT S 3	400		4.17
5	3	5Sx E-1	200		-1.33
12	13	5D N-1		50	-7.67
7	4	5D N-1		50	-7.67

関西秋季スイスペア OPEN SWISS PAIRS Session 2 Flight C 2026年11月3日(火)

10

N: ♠K6 ♡K872 ♢K97 ♣KJ97
W: ♠542 ♡J1043 ♢AQJ ♣852
E: ♠J1073 ♡AQ ♢10842 ♣Q106
S: ♠AQ98 ♡965 ♢653 ♣A43

NS	EW	Contract	N-S	E-W	IMP
14	2	2S E-2	200		3.67
7	10	1NT N 2	120		1.67
6	4	1NT N 2	120		1.67
11	13	1NT N 2	120		1.67
9	5	1NT N 2	120		1.67
1	3	1NT N-1		100	-5.17
8	12	1NT N-1		100	-5.17

11

N: ♠J10 ♡K8742 ♢K5 ♣KQJ4
W: ♠A8542 ♡Q ♢10873 ♣A63
E: ♠K3 ♡653 ♢9642 ♣10982
S: ♠Q976 ♡AJ109 ♢AQJ ♣75

NS	EW	Contract	N-S	E-W	IMP
1	3	4H N 5	450		4.33
6	4	4H N 4	420		3.17
14	2	4H N 4	420		3.17
11	13	4H N 4	420		3.17
8	12	4H N 4	420		3.17
7	10	4H N-1		50	-8.5
9	5	4H N-1		50	-8.5

12

N: ♠97432 ♡98542 ♢10 ♣Q4
W: ♠KJ ♡AK3 ♢Q542 ♣A932
E: ♠Q10 ♡Q76 ♢AJ9873 ♣J6
S: ♠A865 ♡J10 ♢K6 ♣K10875

NS	EW	Contract	N-S	E-W	IMP
7	10	3NT W 3		400	0.67
11	13	3NT W 3		400	0.67
9	5	3NT W 3		400	0.67
8	12	3NT W 4		430	-0.5
6	4	3NT W 4		430	-0.5
14	2	3NT W 4		430	-0.5
1	3	3NT W 4		430	-0.5

13

N: ♠AQ9 ♡73 ♢KJ87532 ♣10
W: ♠1085 ♡AKQ102 ♢A6 ♣973
E: ♠62 ♡9654 ♢Q10 ♣AKJ42
S: ♠KJ743 ♡J8 ♢94 ♣Q865

NS	EW	Contract	N-S	E-W	IMP
11	13	4H W-1	100		9
7	10	3H W 4		170	2.83
6	4	3H W 4		170	2.83
14	2	3H E 4		170	2.83
1	3	5D N-3		300	-0.83
8	12	4H W 4		620	-8.33
9	5	4H W 4		620	-8.33

14

N: ♠986 ♡QJ10 ♢Q5 ♣J10972
W: ♠J104 ♡K873 ♢A73 ♣K84
E: ♠Q73 ♡A94 ♢J984 ♣AQ3
S: ♠AK52 ♡652 ♢K1062 ♣65

NS	EW	Contract	N-S	E-W	IMP
1	3	2NT E-1	50		3.5
8	12	2NT E-1	50		3.5
9	5	Passout			1.33
11	13	1NT E 1		90	-1.33
7	10	2NT E 2		120	-2.33
6	4	2NT E 2		120	-2.33
14	2	1NT E 2		120	-2.33

15

N: ♠832 ♡KJ1065 ♢8542 ♣4
W: ♠Q64 ♡A3 ♢KQ3 ♣AJ1097
E: ♠J ♡94 ♢AJ97 ♣KQ8652
S: ♠AK10975 ♡Q872 ♢106 ♣3

NS	EW	Contract	N-S	E-W	IMP
7	10	5C W 6		420	1
14	2	5C E 6		420	1
1	3	3NT W 5		460	-0.17
8	12	3NT W 5		460	-0.17
6	4	3NT W 5		460	-0.17
11	13	3NT W 5		460	-0.17
9	5	3NT W 6		490	-1.33

16

N: ♠A6 ♡A6 ♢KJ542 ♣AQJ3
W: ♠Q2 ♡QJ10742 ♢A73 ♣85
E: ♠K10983 ♡95 ♢9 ♣K10972
S: ♠J754 ♡K83 ♢Q1086 ♣64

NS	EW	Contract	N-S	E-W	IMP
8	12	3NT N 4	430		6.33
7	10	3NT N 3	400		5.83
6	4	3NT N 3	400		5.83
9	5	2NT N 4	180		0
1	3	3D N 4	130		-1.5
11	13	3NT N-2		100	-7.17
14	2	4S S-4		200	-9.33

17

N: ♠Q652 ♡763 ♢9 ♣A10732
W: ♠A9843 ♡KJ ♢AJ653 ♣6
E: ♠KJ ♡AQ82 ♢K10872 ♣54
S: ♠107 ♡10954 ♢Q4 ♣KQJ98

NS	EW	Contract	N-S	E-W	IMP
11	13	3NT E-1	50		4.33
9	5	3NT E-1	50		4.33
1	3	3NT E-1	50		4.33
6	4	3NT E-1	50		4.33
8	12	2D E 6		170	-2
14	2	5D E 6		420	-7.67
7	10	5D E 6		420	-7.67

18

N: ♠AJ63 ♡73 ♢K109862 ♣3
W: ♠10 ♡AJ10654 ♢754 ♣J85
E: ♠KQ842 ♡92 ♢AJ ♣AQ74
S: ♠975 ♡KQ8 ♢Q3 ♣K10962

NS	EW	Contract	N-S	E-W	IMP
14	2	4H E-2	100		2.17
8	12	2NT W-2	100		2.17
6	4	2NT W-2	100		2.17
9	5	2H W-2	100		2.17
7	10	3H W-1	50		0.17
1	3	2D N-1		100	-3.67
11	13	2NT E 3		150	-5.17

関西秋季スイスペア OPEN SWISS PAIRS Session 2 Flight C 2026年11月3日(火)

19

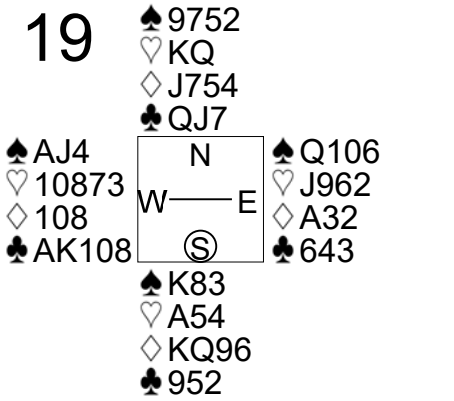

NS	EW	Contract	N-S	E-W	IMP
14	12	1NT S 2	120		2.67
8	2	3H E-1	100		1.5
6	5	3H E-1	100		1.5
13	9	1NT S 1	90		1.5
7	1	1NT S 1	90		1.5
11	10	2S N-2		100	-4.33
4	3	2H E 2		110	-4.33

20

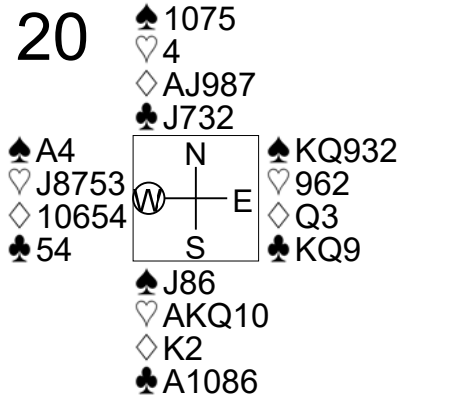

NS	EW	Contract	N-S	E-W	IMP
7	1	1NT S 2	120		2.83
14	12	1NT S 2	120		2.83
8	2	1S E-1	100		1.67
6	5	2D N 2	90		1.67
11	10	2D N 2	90		1.67
4	3	2H S-1		100	-4
13	9	2H S-2		200	-6.67

21

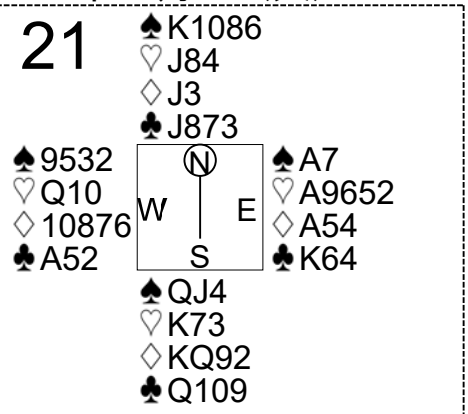

NS	EW	Contract	N-S	E-W	IMP
14	12	1NT E-1	50		3.83
4	3	1NT E-1	50		3.83
7	1	1NT E 1		90	-0.33
11	10	1NT E 1		90	-0.33
6	5	2H E 2		110	-1
13	9	1NT E 3		150	-2.17
8	2	2Sx N-1		200	-3.83

22

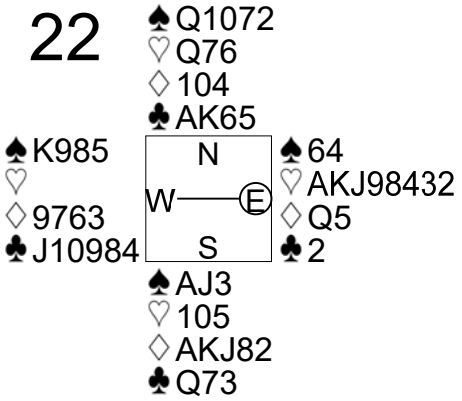

NS	EW	Contract	N-S	E-W	IMP
6	5	3NT N 4	430		5.33
8	2	3NT N 3	400		4.33
7	1	4Hx E-1	200		-1.5
4	3	4H E-2	200		-1.5
13	9	4H E-2	200		-1.5
11	10	4H E-2	200		-1.5
14	12	3D S 4	130		-3.67

23

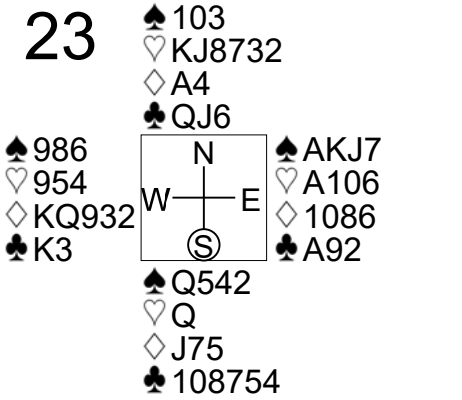

NS	EW	Contract	N-S	E-W	IMP
13	9	2NT E-1	100		7.5
7	1	3D W 3		110	2.5
8	2	2S E 2		110	2.5
14	12	2NT E 4		180	0.33
4	3	2NT E 4		180	0.33
11	10	2H N-3		300	-2.83
6	5	3NT E 4		630	-10.33

24

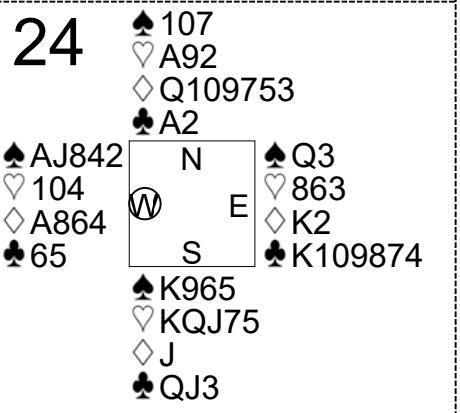

NS	EW	Contract	N-S	E-W	IMP
14	12	4H S 4	420		8
8	2	5Cx E-2	300		5.17
11	10	2H S 3	140		1
4	3	2H S 2	110		0
7	1	4H S-1		50	-4.17
13	9	4H S-1		50	-4.17
6	5	4H S-2		100	-5.83

25

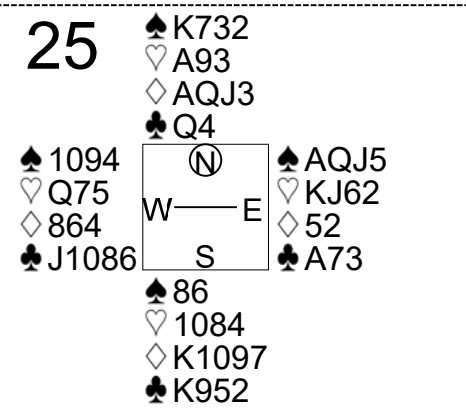

NS	EW	Contract	N-S	E-W	IMP
6	5	1NT N 2	120		2.17
13	9	1NT N 2	120		2.17
11	10	1NT N 1	90		1
7	1	1NT N 1	90		1
14	12	1NT N 1	90		1
4	3	1NT N-1		50	-3.67
8	2	1NT N-1		50	-3.67

26

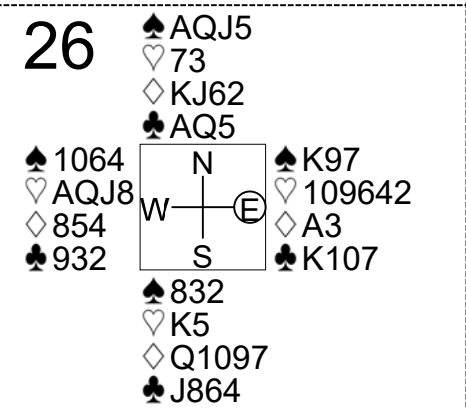

NS	EW	Contract	N-S	E-W	IMP
6	5	1NT N 1	90		4
11	10	1NT N 1	90		4
7	1	1NT N 1	90		4
13	9	1NT N-1		100	-1.5
8	2	1NT N-1		100	-1.5
4	3	1NT N-2		200	-4.5
14	12	1NT N-2		200	-4.5

27

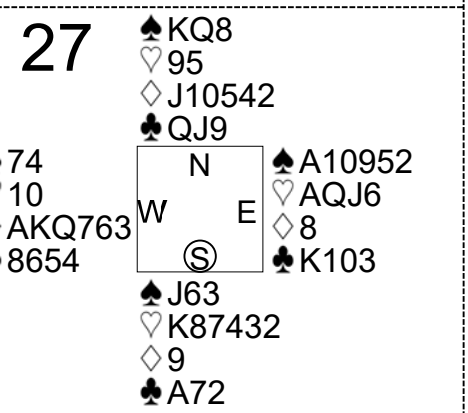

NS	EW	Contract	N-S	E-W	IMP
14	12	2S E-2	100		4.33
8	2	3NT E-1	50		2.83
7	1	2H S-1		50	0.17
13	9	3D W 3		110	-1.83
6	5	2S E 2		110	-1.83
11	10	2S E 2		110	-1.83
4	3	2S E 2		110	-1.83