火曜 朝 クラス2　2026年10月20日(火)朝

1

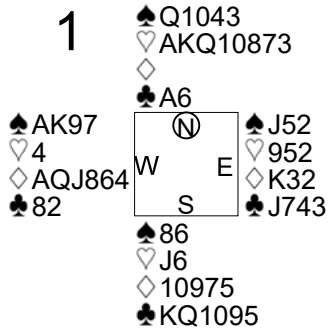

NS	EW	Contract	N-S	E-W	MP
2	9	5H N 5	450		4
1	7	4H N 4	420		2
5	3	4H N 4	420		2
10	6	4H N 4	420		2
4	8	3H N 5	200		0

2

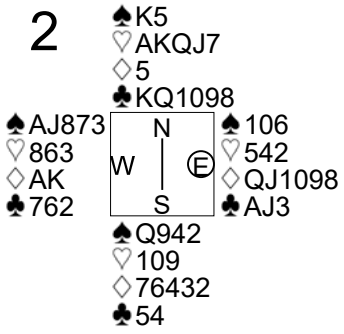

NS	EW	Contract	N-S	E-W	MP
4	8	2H N 4	170		4
2	9	3H N 3	140		3
1	7	2S W-2	100		2
10	6	2S W-1	50		1
5	3	2H N-1		100	0

3

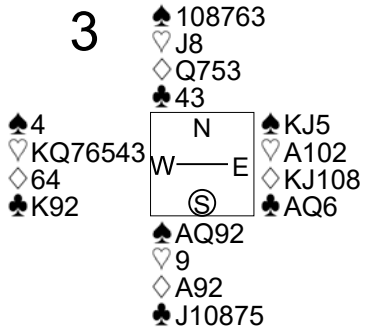

NS	EW	Contract	N-S	E-W	MP
4	8	4H W 4		620	3.5
10	6	4H W 4		620	3.5
5	3	5H W 5		650	1.5
2	9	4H W 5		650	1.5
1	7	4H W 6		680	0

4

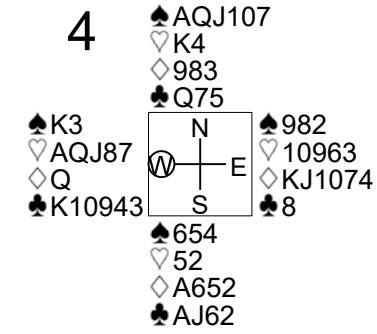

NS	EW	Contract	N-S	E-W	MP
10	7	5H W-2	200		3.5
3	9	4H W-2	200		3.5
6	4	3S N 3	140		2
8	5	4H W-1	100		0.5
2	1	4H E-1	100		0.5

5

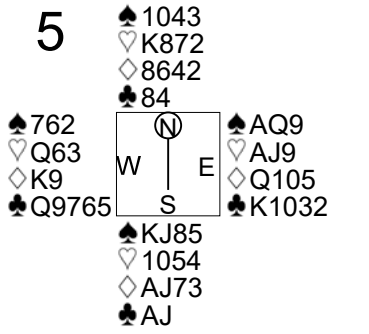

NS	EW	Contract	N-S	E-W	MP
8	5	1NT E 3		150	3
2	1	1NT E 3		150	3
10	7	1NT E 3		150	3
3	9	1NT E 4		180	0.5
6	4	1NT E 4		180	0.5

6

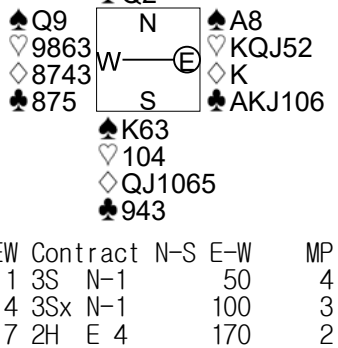

NS	EW	Contract	N-S	E-W	MP
2	1	3S N-1		50	4
6	4	3Sx N-1		100	3
10	7	2H E 4		170	2
3	9	3H E 5		200	1
8	5	3NT E 3		600	0

7

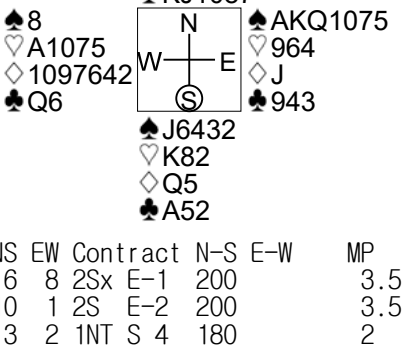

NS	EW	Contract	N-S	E-W	MP
6	8	2Sx E-1	200		3.5
10	1	2S E-2	200		3.5
3	2	1NT S 4	180		2
7	5	2NT S-1		100	1
9	4	2S E 3		140	0

8

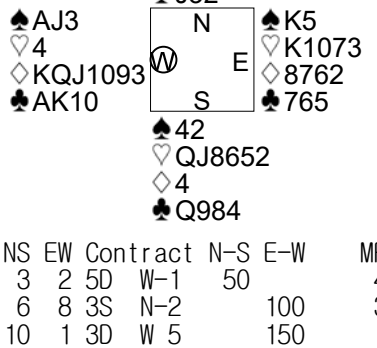

NS	EW	Contract	N-S	E-W	MP
3	2	5D W-1	50		4
6	8	3S N-2		100	3
10	1	3D W 5		150	1
9	4	3D W 5		150	1
7	5	3D W 5		150	1

9

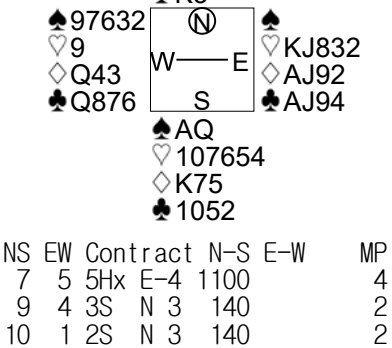

NS	EW	Contract	N-S	E-W	MP
7	5	5Hx E-4	1100		4
9	4	3S N 3	140		2.5
10	1	2S N 3	140		2.5
6	8	2S N 2	110		1
3	2	3S N-1		50	0

10

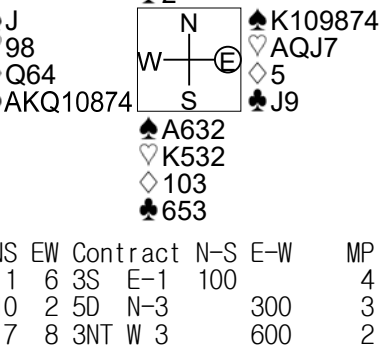

NS	EW	Contract	N-S	E-W	MP
1	6	3S E-1	100		4
10	2	5D N-3		300	3
7	8	3NT W 3		600	2
9	5	4S E 4		620	0.5
4	3	4S E 4		620	0.5

火曜 朝 クラス2　2026年10月20日(火)朝

11

N: ♠Q4 ♡K10764 ♢A109 ♣KJ3
W: ♠A987 ♡85 ♢7653 ♣1084
E: ♠J6 ♡AJ9 ♢J82 ♣Q9752
S: ♠K10532 ♡Q32 ♢KQ4 ♣A6

NS	EW	Contract	N-S	E-W	MP
10	2	4H N 4	420		2
9	5	4H N 4	420		2
7	8	4H N 4	420		2
4	3	4H N 4	420		2
1	6	4H N 4	420		2

12

N: ♠109 ♡A9876 ♢A76 ♣Q105
W: ♠AQJ75 ♡43 ♢3 ♣J9763
E: ♠K43 ♡KJ5 ♢KQJ854 ♣2
S: ♠862 ♡Q102 ♢1092 ♣AK84

NS	EW	Contract	N-S	E-W	MP
4	3	3D E 4		130	4
1	6	3S W 3		140	2.5
7	8	2S W 3		140	2.5
9	5	3S W 4		170	1
10	2	3S W 5		200	0

13

N: ♠A876 ♡98 ♢K653 ♣J105
W: ♠104 ♡1053 ♢AJ4 ♣AK986
E: ♠932 ♡AQ74 ♢Q107 ♣Q32
S: ♠KQJ5 ♡KJ62 ♢982 ♣74

NS	EW	Contract	N-S	E-W	MP
8	1	2S N 2	110		4
2	7	1NT W 1		90	2.5
5	4	1NT E 1		90	2.5
9	6	3S N-1		100	1
10	3	1NT W 2		120	0

14

N: ♠Q109654 ♡J86 ♢A872 ♣
W: ♠AJ72 ♡K542 ♢95 ♣K65
E: ♠3 ♡Q1073 ♢K6 ♣AQJ973
S: ♠K8 ♡A9 ♢QJ1043 ♣10842

NS	EW	Contract	N-S	E-W	MP
9	6	3H W 4		170	3.5
8	1	3H W 4		170	3.5
2	7	3NT E 3		400	2
10	3	4H W 4		420	1
5	4	4H W 5		450	0

15

N: ♠A93 ♡J32 ♢AQ53 ♣K73
W: ♠Q75 ♡10975 ♢K972 ♣Q10
E: ♠K10862 ♡AK4 ♢8 ♣AJ95
S: ♠J4 ♡Q86 ♢J1064 ♣8642

NS	EW	Contract	N-S	E-W	MP
9	6	2S E-1	50		4
2	7	3S E 3		140	2
8	1	3S E 3		140	2
5	4	3S E 3		140	2
10	3	3S E 4		170	0

16

N: ♠QJ763 ♡J5 ♢7632 ♣98
W: ♠842 ♡A74 ♢KQJ10 ♣KJ7
E: ♠AK ♡982 ♢A854 ♣Q1053
S: ♠1095 ♡KQ1063 ♢9 ♣A642

NS	EW	Contract	N-S	E-W	MP
9	7	5D W-3	300		4
8	2	4D W 4		130	3
3	1	4D W 5		150	2
10	4	3NT W 4		630	0.5
6	5	3NT E 4		630	0.5

17

N: ♠J3 ♡KQ10974 ♢J106 ♣Q4
W: ♠986 ♡53 ♢A754 ♣AK83
E: ♠AKQ10 ♡A ♢KQ832 ♣J96
S: ♠7542 ♡J862 ♢9 ♣10752

NS	EW	Contract	N-S	E-W	MP
9	7	2Hx N-1		100	4
8	2	5D E 6		420	3
10	4	4Hx N-3		500	2
6	5	3NT W 7		520	0.5
3	1	3NT E 7		520	0.5

18

N: ♠A7 ♡KQ2 ♢J1098 ♣J1053
W: ♠J1043 ♡A10963 ♢4 ♣986
E: ♠KQ92 ♡J754 ♢Q3 ♣A42
S: ♠865 ♡8 ♢AK7652 ♣KQ7

NS	EW	Contract	N-S	E-W	MP
9	7	4D S 5	150		4
3	1	4D S 4	130		2
10	4	2D S 4	130		2
8	2	2D S 4	130		2
6	5	4D S-1		100	0

19

N: ♠AKJ ♡Q10983 ♢9 ♣9865
W: ♠943 ♡AJ72 ♢K8652 ♣7
E: ♠Q852 ♡K5 ♢J104 ♣AJ32
S: ♠1076 ♡64 ♢AQ73 ♣KQ104

NS	EW	Contract	N-S	E-W	MP
7	6	2NT N 4	180		4
3	8	1NT S-1		50	3
1	9	2NT S-2		100	1.5
4	2	2H N-2		100	1.5
10	5	2D W 3		110	0

20

N: ♠7 ♡8643 ♢A1087 ♣A852
W: ♠KQJ86 ♡9752 ♢9 ♣KQJ
E: ♠10953 ♡AK10 ♢43 ♣10974
S: ♠A42 ♡QJ ♢KQJ652 ♣63

NS	EW	Contract	N-S	E-W	MP
3	8	5D S-1		100	4
4	2	2S W 4		170	2.5
1	9	2S W 4		170	2.5
7	6	5Dx S-1		200	0.5
10	5	3S W 5		200	0.5

火曜 朝 クラス2　2026年10月20日(火)朝

21

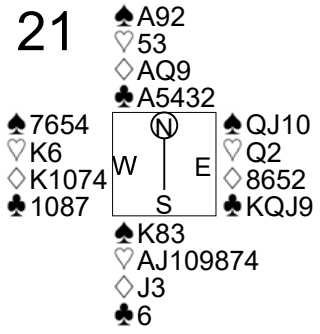

NS	EW	Contract	N-S	E-W	MP
4	2	4H S 6	680		4
10	5	4H S 5	650		2.5
1	9	4H S 5	650		2.5
3	8	4H S 4	620		1
7	6	2H S 5	200		0

Tuesday, October 20, 2026

1
N/-

	♠ QT43 ♥ AKQT873 ♦ - ♣ A6	
♠ AK97 ♥ 4 ♦ AQJ864 ♣ 82		♠ J52 ♥ 952 ♦ K32 ♣ J743
15 14 5 6	♠ 86 ♥ J6 ♦ T975 ♣ KQT95	

	N	S
N	5	5
♠	5	5
♥	11	11
♦	4	4
♣	9	9

Opt res: NS 5H;450

	E	W
N	1	1
♠	6	6
♥	1	1
♦	9	9
♣	1	1

2
E/NS

	♠ K5 ♥ AKQJ7 ♦ 5 ♣ KQT98	
♠ AJ873 ♥ 863 ♦ AK ♣ 762		♠ T6 ♥ 542 ♦ QJT98 ♣ AJ3
18 12 8 2	♠ Q942 ♥ T9 ♦ 76432 ♣ 54	

	N	S
N	6	6
♠	6	6
♥	9	9
♦	5	5
♣	8	8

Opt res: NS 3H;140

	E	W
N	7	7
♠	6	6
♥	3	3
♦	7	7
♣	4	4

3
S/EW

	♠ T8763 ♥ J8 ♦ Q753 ♣ 43	
♠ 4 ♥ KQ76543 ♦ 64 ♣ K92		♠ KJ5 ♥ AT2 ♦ KJT8 ♣ AQ6
3 8 18 11	♠ AQ92 ♥ 9 ♦ A92 ♣ JT875	

	N	S
N	2	2
♠	7	7
♥	2	2
♦	4	4
♣	5	4

Opt res: E 4N;-660

	E	W
N	11	10
♠	6	5
♥	11	11
♦	9	8
♣	8	8

4
W/All

	♠ AQJT7 ♥ K4 ♦ 983 ♣ Q75	
♠ K3 ♥ AQJ87 ♦ Q ♣ KT943		♠ 982 ♥ T963 ♦ KJT74 ♣ 8
12 15 4 9	♠ 654 ♥ 52 ♦ A652 ♣ AJ62	

	N	S
N	8	8
♠	9	9
♥	5	5
♦	7	7
♣	7	7

Opt res: NS 2S;140

	E	W
N	4	4
♠	4	4
♥	8	8
♦	6	6
♣	5	5

5
N/NS

	♠ T43 ♥ K872 ♦ 8642 ♣ 84	
♠ 762 ♥ Q63 ♦ K9 ♣ Q9765		♠ AQ9 ♥ AJ9 ♦ QT5 ♣ KT32
3 7 16 14	♠ KJ85 ♥ T54 ♦ AJ73 ♣ AJ	

	N	S
N	3	3
♠	5	5
♥	5	5
♦	6	6
♣	3	3

Opt res: EW 3N;-400

	E	W
N	9	9
♠	8	7
♥	8	8
♦	7	7
♣	10	10

6
E/EW

	♠ JT7542 ♥ A7 ♦ A92 ♣ Q2	
♠ Q9 ♥ 9863 ♦ 8743 ♣ 875		♠ A8 ♥ KQJ52 ♦ K ♣ AKJT6
11 2 21 6	♠ K63 ♥ T4 ♦ QJT65 ♣ 943	

	N	S
N	6	6
♠	9	9
♥	2	2
♦	9	9
♣	3	3

Opt res: NS 4SX;-100

	E	W
N	6	6
♠	3	3
♥	10	10
♦	3	3
♣	10	10

7
S/All

	♠ 9 ♥ QJ3 ♦ AK83 ♣ KJT87	
♠ 8 ♥ AT75 ♦ T97642 ♣ Q6		♠ AKQT75 ♥ 964 ♦ J ♣ 943
14 6 10 10	♠ J6432 ♥ K82 ♦ Q5 ♣ A52	

	N	S
N	9	9
♠	7	7
♥	8	8
♦	8	8
♣	10	10

Opt res: NS 3N;600

	E	W
N	4	4
♠	6	6
♥	4	4
♦	5	5
♣	3	3

8
W/-

	♠ QT9876 ♥ A9 ♦ A5 ♣ J32	
♠ AJ3 ♥ 4 ♦ KQJT93 ♣ AKT		♠ K5 ♥ KT73 ♦ 8762 ♣ 765
11 18 6 5	♠ 42 ♥ QJ8652 ♦ 4 ♣ Q984	

	N	S
N	3	3
♠	6	6
♥	7	7
♦	2	2
♣	6	6

Opt res: EW 3N;-430

	E	W
N	10	10
♠	6	6
♥	5	6
♦	11	11
♣	7	7

9
N/EW

	♠ KJT854 ♥ AQ ♦ T86 ♣ K3	
♠ 97632 ♥ 9 ♦ Q43 ♣ Q876		♠ - ♥ KJ832 ♦ AJ92 ♣ AJ94
13 4 14 9	♠ AQ ♥ T7654 ♦ K75 ♣ T52	

	N	S
N	8	6
♠	8	8
♥	5	4
♦	3	3
♣	3	3

Opt res: EW 4C;-130

	E	W
N	5	5
♠	5	5
♥	8	8
♦	8	8
♣	10	10

10
E/All

	♠ Q5 ♥ T64 ♦ AKJ9872 ♣ 2	
♠ J ♥ 98 ♦ Q64 ♣ AKQT874		♠ KT9874 ♥ AQJ7 ♦ 5 ♣ J9
10 12 11 7	♠ A632 ♥ K532 ♦ T3 ♣ 653	

	N	S
N	5	5
♠	4	2
♥	4	4
♦	9	9
♣	2	2

Opt res: EW 3S;-140

	E	W
N	5	5
♠	9	9
♥	8	8
♦	3	4
♣	10	10

11
S/-

	♠ Q4 ♥ KT764 ♦ AT9 ♣ KJ3	
♠ A987 ♥ 85 ♦ 7653 ♣ T84		♠ J6 ♥ AJ9 ♦ J82 ♣ Q9752
13 4 9 14	♠ KT532 ♥ Q32 ♦ KQ4 ♣ A6	

	N	S
N	10	10
♠	10	9
♥	10	10
♦	9	9
♣	8	8

Opt res: NS 3N;430

	E	W
N	3	3
♠	3	3
♥	3	3
♦	4	4
♣	5	5

12
W/NS

	♠ T9 ♥ A9876 ♦ A76 ♣ QT5	
♠ AQJ75 ♥ 43 ♦ 3 ♣ J9763		♠ K43 ♥ KJ5 ♦ KQJ854 ♣ 2
10 8 13 9	♠ 862 ♥ QT2 ♦ T92 ♣ AK84	

	N	S
N	5	5
♠	3	3
♥	8	8
♦	3	3
♣	6	6

Opt res: EW 4S;-420

	E	W
N	6	6
♠	10	10
♥	4	4
♦	8	8
♣	7	7

N/S/E/W | **HCP:** 10.4 8.6 11.7 9.3 | **Bal:** 8 11 12 10 | **> 6:** 2 1 0 2 | **= 1:** 5 6 8 11 | **= 0:** 2 0 1 0

Tuesday, October 20, 2026

13
N/All

	♠ A876 ♥ 98 ♦ K653 ♣ JT5	
♠ T4 ♥ T53 ♦ AJ4 ♣ AK986		♠ 932 ♥ AQ74 ♦ QT7 ♣ Q32
8 12 10 10	♠ KQJ5 ♥ KJ62 ♦ 982 ♣ 74	

	N	S
N	5	5
♠	8	8
♥	5	5
♦	7	7
♣	5	5

Opt res:
NS 2S;110

	E	W
N	7	7
♠	5	5
♥	7	7
♦	6	6
♣	8	8

14
E/-

	♠ QT9654 ♥ J86 ♦ A872 ♣ -	
♠ AJ72 ♥ K542 ♦ 95 ♣ K65		♠ 3 ♥ QT73 ♦ K6 ♣ AQJ973
7 11 12 10	♠ K8 ♥ A9 ♦ QJT43 ♣ T842	

	N	S
N	3	3
♠	8	8
♥	3	3
♦	10	10
♣	2	2

Opt res:
NS 5DX;-100

	E	W
N	8	8
♠	5	5
♥	9	9
♦	3	3
♣	11	11

15
S/NS

	♠ A93 ♥ J32 ♦ AQ53 ♣ K73	
♠ Q75 ♥ T975 ♦ K972 ♣ QT		♠ KT862 ♥ AK4 ♦ 8 ♣ AJ95
14 7 15 4	♠ J4 ♥ Q86 ♦ JT64 ♣ 8642	

	N	S
N	4	3
♠	4	3
♥	5	4
♦	6	6
♣	5	3

Opt res:
EW 1S;-140

	E	W
N	8	8
♠	9	9
♥	8	8
♦	7	7
♣	8	8

16
W/EW

	♠ QJ763 ♥ J5 ♦ 7632 ♣ 98	
♠ 842 ♥ A74 ♦ KQJT ♣ KJ7		♠ AK ♥ 982 ♦ A854 ♣ QT53
4 14 13 9	♠ T95 ♥ KQT63 ♦ 9 ♣ A642	

	N	S
N	3	3
♠	6	6
♥	5	5
♦	3	3
♣	3	3

Opt res:
EW 1N;-120

	E	W
N	8	8
♠	5	5
♥	8	8
♦	9	9
♣	9	9

17
N/-

	♠ J3 ♥ KQT974 ♦ JT6 ♣ Q4	
♠ 986 ♥ 53 ♦ A754 ♣ AK83		♠ AKQT ♥ A ♦ KQ832 ♣ J96
9 11 19 1	♠ 7542 ♥ J862 ♦ 9 ♣ T752	

	N	S
N	-	-
♠	-	-
♥	7	7
♦	-	-
♣	1	1

Opt res:
EW 7N;-1520

	E	W
N	13	13
♠	13	13
♥	6	6
♦	13	13
♣	12	12

18
E/NS

	♠ A7 ♥ KQ2 ♦ JT98 ♣ JT53	
♠ JT43 ♥ AT963 ♦ 4 ♣ 986		♠ KQ92 ♥ J754 ♦ Q3 ♣ A42
11 5 12 12	♠ 865 ♥ 8 ♦ AK7652 ♣ KQ7	

	N	S
N	8	8
♠	6	6
♥	6	6
♦	10	10
♣	10	10

Opt res:
NS 3D/3C;130

	E	W
N	3	3
♠	7	7
♥	7	7
♦	2	2
♣	2	2

19
S/EW

	♠ AKJ ♥ QT983 ♦ 9 ♣ 9865	
♠ 943 ♥ AJ72 ♦ K8652 ♣ 7		♠ Q852 ♥ K5 ♦ JT4 ♣ AJ32
10 8 11 11	♠ T76 ♥ 64 ♦ AQ73 ♣ KQT4	

	N	S
N	6	6
♠	5	5
♥	7	7
♦	5	5
♣	8	8

Opt res:
EW 2D;-90

	E	W
N	6	6
♠	7	7
♥	6	6
♦	8	8
♣	5	5

20
W/All

	♠ 7 ♥ 8643 ♦ AT87 ♣ A852	
♠ KQJ86 ♥ 9752 ♦ 9 ♣ KQJ		♠ T953 ♥ AKT ♦ 43 ♣ T974
8 12 7 13	♠ A42 ♥ QJ ♦ KQJ652 ♣ 63	

	N	S
N	8	8
♠	3	3
♥	5	5
♦	10	10
♣	5	5

Opt res:
NS 4D;130

	E	W
N	5	5
♠	9	9
♥	8	8
♦	3	3
♣	8	8

21
N/NS

	♠ A92 ♥ 53 ♦ AQ9 ♣ A5432	
♠ 7654 ♥ K6 ♦ KT74 ♣ T87		♠ QJT ♥ Q2 ♦ 8652 ♣ KQJ9
14 6 11 9	♠ K83 ♥ AJT9874 ♦ J3 ♣ 6	

	N	S
N	10	10
♠	9	9
♥	12	12
♦	8	8
♣	8	8

Opt res:
NS 6H;1430

	E	W
N	1	1
♠	4	4
♥	1	1
♦	4	4
♣	4	4